Grahame Cook Plumbing Supplies Sales Pty Ltd
ABN 11 070 592 951

27 Loyalty Road
North Rocks NSW 2151 Australia

T 61 2 9630 5250
F 61 2 9683 3100

E info@cooksplumbing.com.au
www.cooksplumbing.com.au

Product Specification Sheet

Villa Bath/Shower Mixer Chrome – 6903.04

Villa's signature upswept angles are softened by its flattened, rounded lines, creating simple, enduring looks and a tangible sense of quality. Villa is ideal for refreshing traditional or classic bathrooms.

- ✓ Upswept, angular design
- ✓ Can be teamed with a variety of bath or shower outlets
- ✓ Complete range of Villa bathroom mixers available
- ✓ Chrome finish (also available in gunmetal grey)

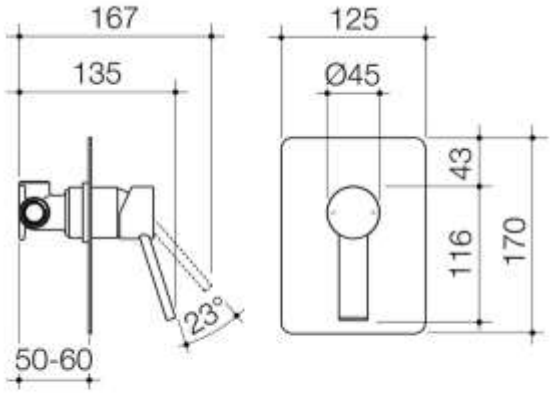

© Grahame Cook Plumbing Supplies Sales Pty Ltd
ABN 11 070 592 951

NB: Dimensions, specifications, drawings, colours and images are deemed correct at the time of publishing. Cooks Plumbing Supplies takes no liability as this information may be changed by the manufacturer without further notice. Please confirm all information prior to using the spefications in any building references.