Grahame Cook Plumbing Supplies Sales Pty Ltd
ABN 11 070 592 951

27 Loyalty Road
North Rocks NSW 2151 Australia

T 61 2 9630 5250
F 61 2 9683 3100

E info@cooksplumbing.com.au
www.cooksplumbing.com.au

Product Specification Sheet

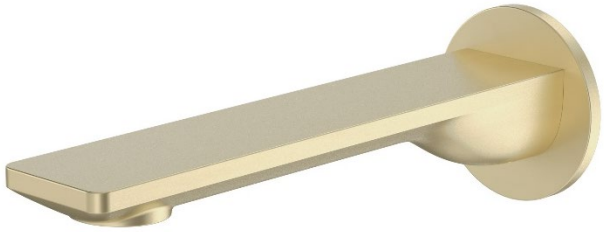

Urbane II 180mm Basin/Bath Outlet Round Plate Brushed Brass - 99665BB6A

Embracing a distinctly modern Australian style, the Caroma Urbane II Tapware Collection is a combination of functional and design unity. Supported by a beautiful and highly durable palette of 5 colour finishes, the collection can be tailored to suit a range of styles and tastes.

- ✓ Durable brass construction
- ✓ Concealed aerator with adjustable stream direction
- ✓ Unrestricted aerator included for bath installations
- ✓ 180mm reach
- ✓ WELS 6* rated, 4.5l/min
- ✓ Brushed Brass finish (also available in brushed nickel, gunmetal, matte black and chrome)

CAROMA

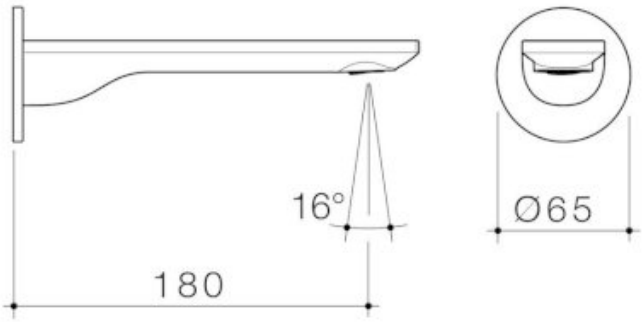

© Grahame Cook Plumbing Supplies Sales Pty Ltd
ABN 11 070 592 951

NB: Dimensions, specifications, drawings, colours and images are deemed correct at the time of publishing. Cook's Plumbing Supplies takes no liability as this information may be changed by the manufacturer without further notice. Please confirm all information prior to using the spefications in any building references.