Grahame Cook Plumbing Supplies Sales Pty Ltd
ABN 11 070 592 951

27 Loyalty Road
North Rocks NSW 2151 Australia

T 61 2 9630 5250
F 61 2 9683 3100

E info@cooksplumbing.com.au
www.cooksplumbing.com.au

# Product Specification Sheet

## Round Square Wall Basin/Bath Mixer 180mm Chrome – CL10062.C5A

Get the best of both worlds with Clarks Round Square range.

- ✓ Unrestricted aerator included for bath installations
- ✓ 180mm projection (also available in 220mm)
- ✓ WELS 5* rating, 6L/min
- ✓ Chrome finish (also available in matte black)

CLARK

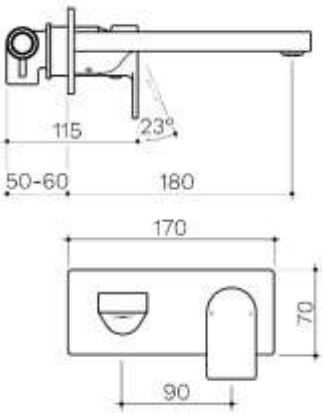


© Grahame Cook Plumbing Supplies Sales Pty Ltd
ABN 11 070 592 951

NB: Dimensions, specifications, drawings, colours and images are deemed correct at the time of publishing. Cooks Plumbing Supplies takes no liability as this information may be changed by the manufacturer without further notice. Please confirm all information prior to using the spefications in any building references.