Grahame Cook Plumbing Supplies Sales Pty Ltd
ABN 11 070 592 951

27 Loyalty Road
North Rocks NSW 2151 Australia

T 61 2 9630 5250
F 61 2 9683 3100

E info@cooksplumbing.com.au
www.cooksplumbing.com.au

Product Specification Sheet

Round Blade Basin Mixer Matte Black – CL10007.B5A

Clark's Round Blade Range will be the icing on your renovation cake!

- ✓ Australian designed
- ✓ WELS 5* Rating, 6L/min
- ✓ Matte Black finish (also available in matte black with brass handle and chrome)

CLARK

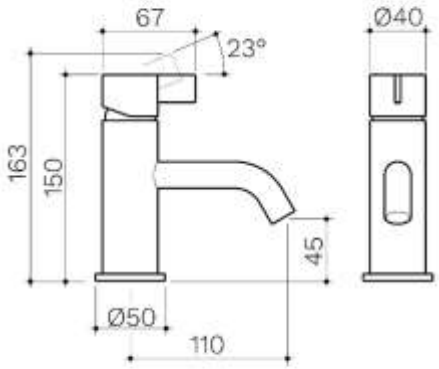

© Grahame Cook Plumbing Supplies Sales Pty Ltd
ABN 11 070 592 951

NB: Dimensions, specifications, drawings, colours and images are deemed correct at the time of publishing. Cooks Plumbing Supplies takes no liability as this information may be changed by the manufacturer without further notice. Please confirm all information prior to using the spefications in any building references.