Grahame Cook Plumbing Supplies Sales Pty Ltd
ABN 11 070 592 951

27 Loyalty Road
North Rocks NSW 2151 Australia

T 61 2 9630 5250
F 61 2 9683 3100

E info@cooksplumbing.com.au
www.cooksplumbing.com.au

Product Specification Sheet

Luna Wall Basin/Bath Mixer Set – 68186C5A

Classic and relaxed. The subtle, subdued curves of Luna will effortlessly flow into any contemporary bathroom. Coordinate with the Luna collection of basins, baths and toilet suites for a stylish, timeless look.

- ✓ Flat paddle handle
- ✓ 25mm ceramic disc cartridge enables slim, sleek design
- ✓ Easy-mount, time saving installation
- ✓ Easy clean silicone aerator prevents limescale
- ✓ Chrome finish

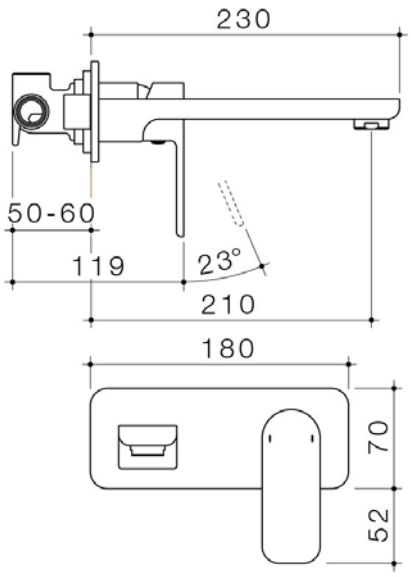

© Grahame Cook Plumbing Supplies Sales Pty Ltd
ABN 11 070 592 951

NB: Dimensions, specifications, drawings, colours and images are deemed correct at the time of publishing. Cooks Plumbing Supplies takes no liability as this information may be changed by the manufacturer without further notice. Please confirm all information prior to using the spefications in any building references.