Grahame Cook Plumbing Supplies Sales Pty Ltd
ABN 11 070 592 951

27 Loyalty Road
North Rocks NSW 2151 Australia

T 61 2 9630 5250
F 61 2 9683 3100

E info@cooksplumbing.com.au
www.cooksplumbing.com.au

Product Specification Sheet

Liano II Pull Down Sink Mixer With Dual Spray Matte Black – 96381B56A

Combining the aesthetic appeal of the stunning Liano II and Urbane II bathroom collections, this new sink mixer range is the perfect balance of design and functionality creating the ultimate statement in your kitchen.

- ✓ Durable brass body construction
- ✓ Adjustable 140 degree's outlet rotation
- ✓ 2 function spray options: aerated flow and veggie spray
- ✓ Pull–down anti coil hose for extended reach
- ✓ Magnetic spray docking allows hose to snap back into position for ease of use
- ✓ European SoftPEX hoses provide superior durability, longer life and are free from impurities
- ✓ Supplied with 2 handle options in Liano II pin and Urbane II paddle designs
- ✓ WELS 5* Rated, 6L/min (with optional WELS 6* Rated 4.5L/min aerator supplied)
- ✓ Matte Black finish (also available in chrome, brushed nickel, gunmetal and brushed brass)

CAROMA

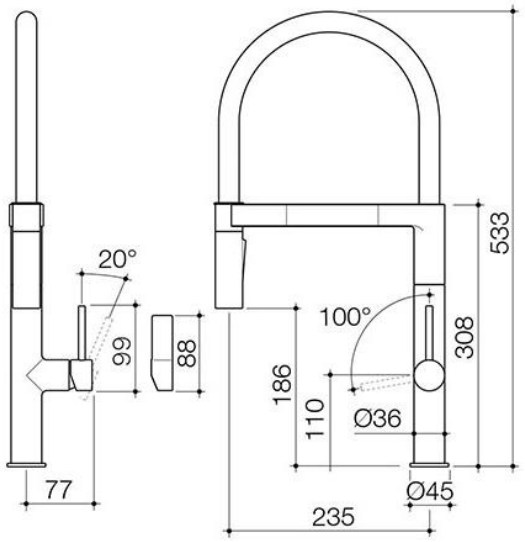

© Grahame Cook Plumbing Supplies Sales Pty Ltd
ABN 11 070 592 951

NB: Dimensions, specifications, drawings, colours and images are deemed correct at the time of publishing. Cooks Plumbing Supplies takes no liability as this information may be changed by the manufacturer without further notice. Please confirm all information prior to using the spefications in any building references.