LA VIDA

Free-Standing Cast Stone Bath

- Cast Stone Solid Surface Bath
- Matte white finish
- Modern free-standing style
- Easy to clean finish
- Overflow
- Chrome waste included with bath
- Matte white waste available separately
- Weight: 184 kg
- Capacity: 290 litres

CARE: Fienza's Cast Stone Solid Surface products are the same quality material all the way through, meaning minor damage can be sanded and refinished as new. In case of deeper damage, a solid surface repair fluid is available from Fienza. These products carry a five year warranty on the finish, on condition that care instructions have been correctly followed. Please see 'Cast Stone Care' instructions before use.

Product Code: ST16

Length	1690 mm
Width	750 mm
Height	880 mm
Weight	184 kg

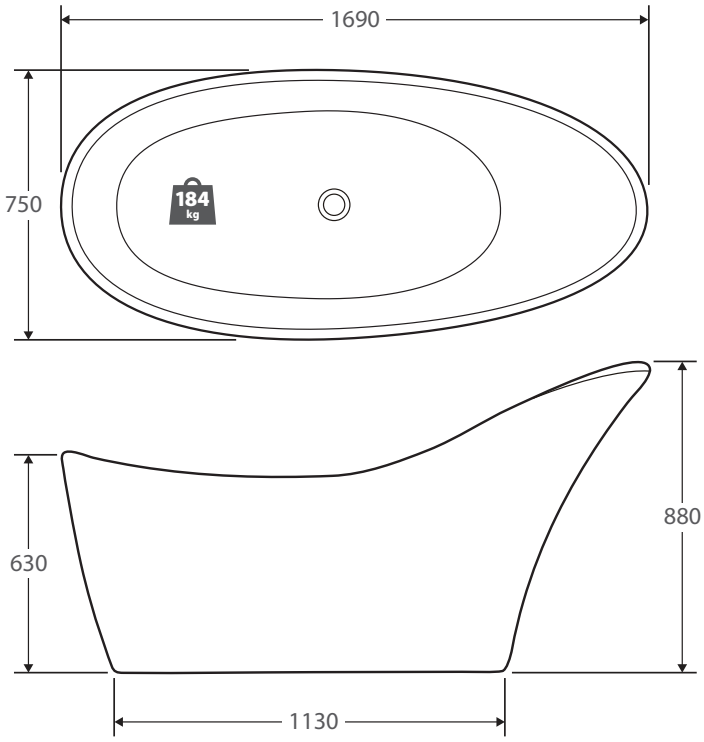

Solid Surface Structural Integrity
25 Year Warranty: Replacement on Bath Shell

Solid Surface Finish
5 Year Warranty: Replacement Product or Repair

Overflow Kits
1 Year Warranty: Replacement Parts and Labour

All measurements are in millimetres and subject to change without notice.

Updated: 21 January 2019