Grahame Cook Plumbing Supplies Sales Pty Ltd
ABN 11 070 592 951

27 Loyalty Road
North Rocks NSW 2151 Australia

T 61 2 9630 5250
F 61 2 9683 3100

E info@cooksplumbing.com.au
www.cooksplumbing.com.au

Product Specification Sheet

Coolibah Classic Cross Shower Set Chrome – 90303C3A

A timeless and enduring design made with Australian ingenuity to suit your lifestyle

- ✓ 3-piece classic cross shower set
- ✓ Modern cylindrical shape for easy clean and care
- ✓ Matching tapware and accessories to complete your bathroom
- ✓ WELS 3* Rating, 9L/min
- ✓ Chrome finish

CAROMA

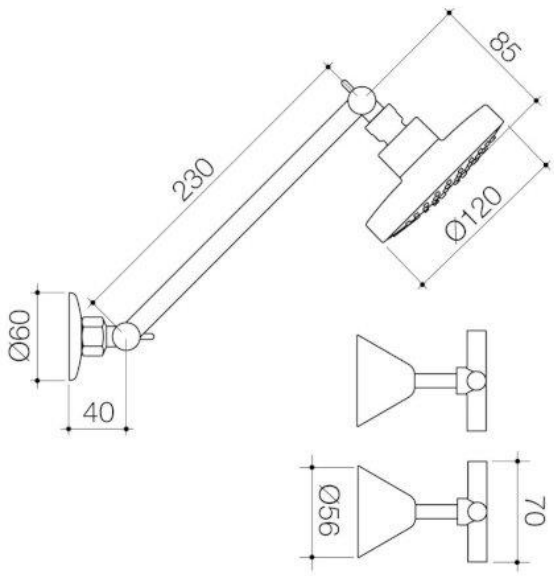

© Grahame Cook Plumbing Supplies Sales Pty Ltd
ABN 11 070 592 951

NB: Dimensions, specifications, drawings, colours and images are deemed correct at the time of publishing. Cooks Plumbing Supplies takes no liability as this information may be changed by the manufacturer without further notice. Please confirm all information prior to using the spefications in any building references.